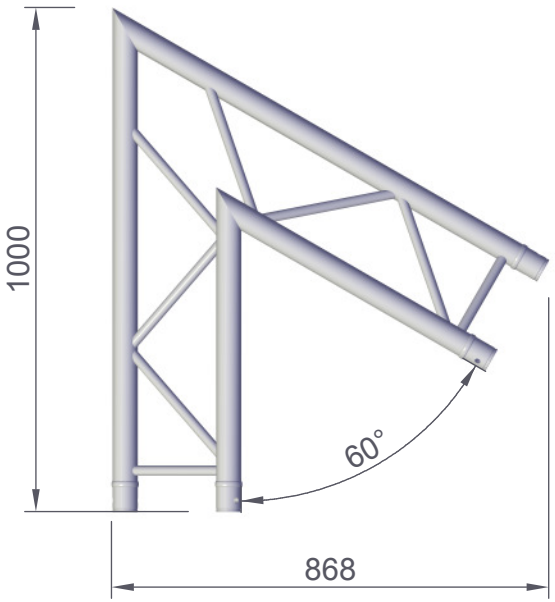

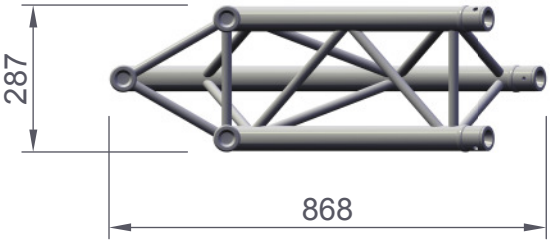

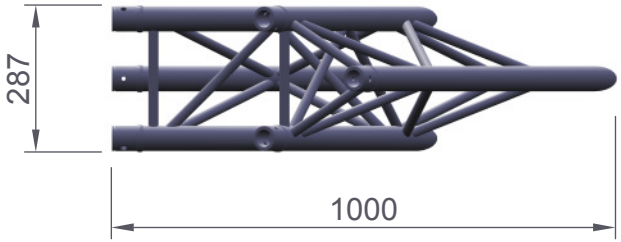

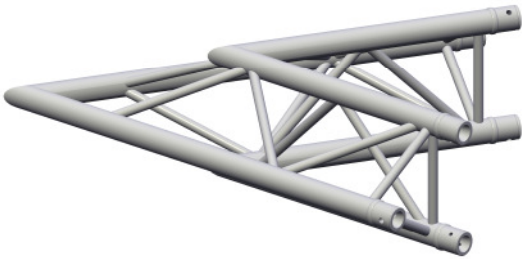

HOF KON			290-3	HD	C17
Art.no.	H12290317		TÜV		HOF Alutec GmbH & Co. KG
	Tube	48x3 mm	EUROCODE 9		
	Bracing	20x2 mm			
	EN-AW 6082T6				
	Weight	7,7 kg			