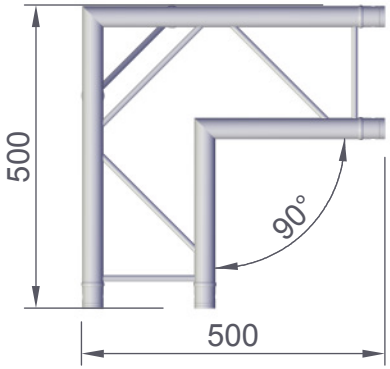

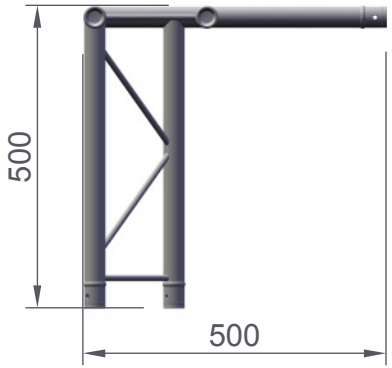

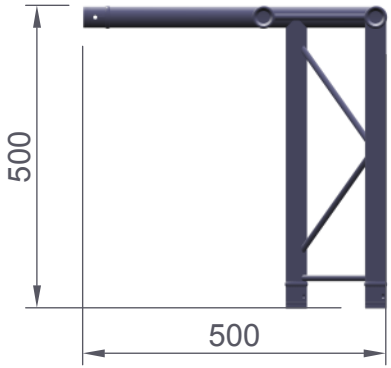

HOF KON			220-2		C31H
Art.no.	118220231H		TÜV		HOF Alutec GmbH & Co. KG
	Tube	35x2 mm	EUROCODE 9		
	Bracing	10x2 mm			
	EN-AW 6060T66				
	Weight	1,9 kg			