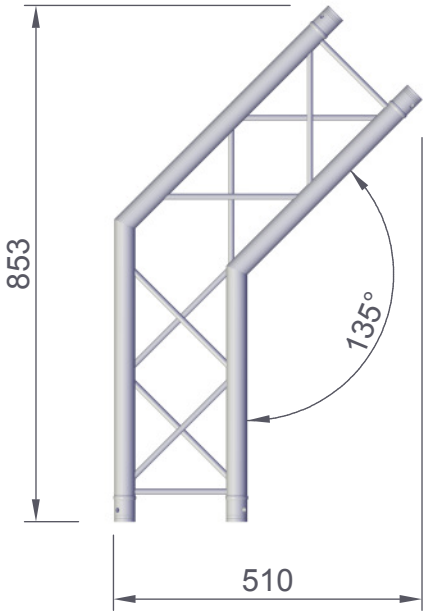

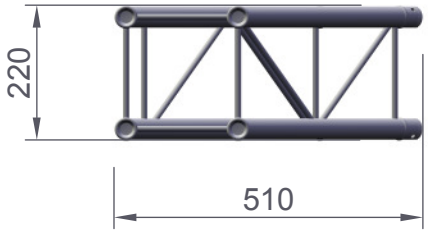

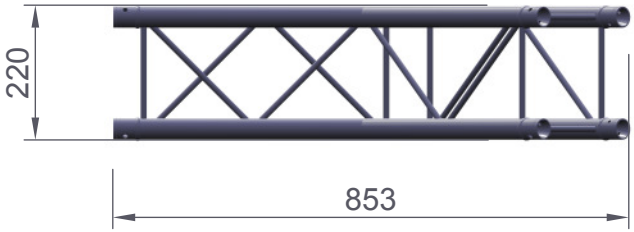

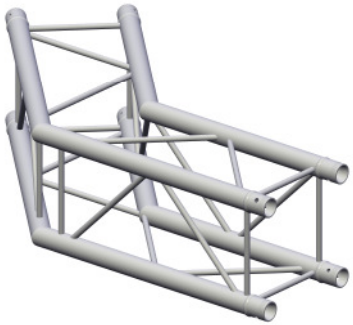

HOF KON			220-4		C23
Art.no.	118220423		TÜV		HOF Alutec GmbH & Co. KG
	Tube	35x2 mm	EUROCODE 9		
	Bracing	10x2 mm			
	EN-AW 6060T66				
	Weight	3,0 kg			