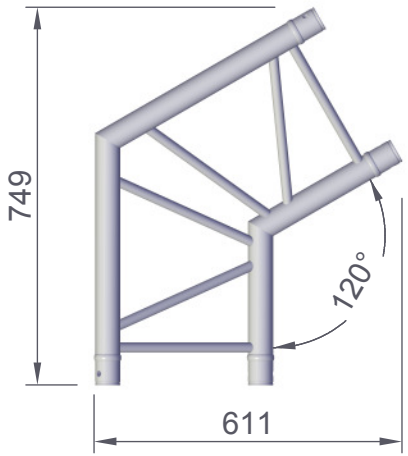

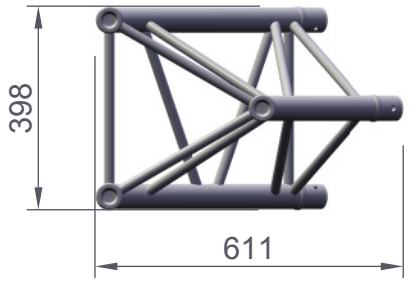

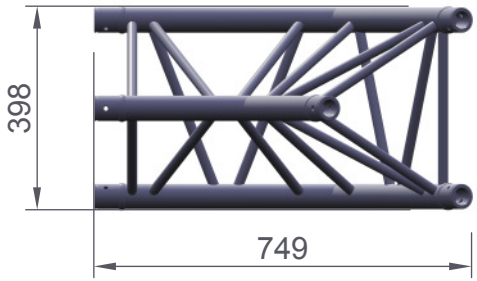

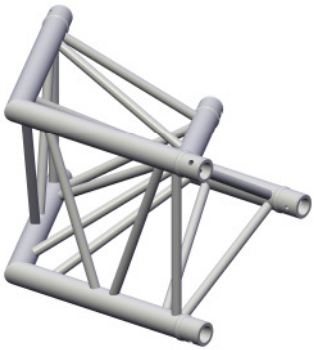

HOF KON			400-3		C27
Art.no.	112400327		TÜV		HOF Alutec GmbH & Co. KG
	Tube	50x2 mm	EUROCODE 9		
	Bracing	25x2 mm			
	EN-AW 6082T6				
	Weight	5,1 kg			